Code: **NP99-BNS7UBL**

Nostris - shower set with BNS7U shower mixer, black

https://www.ferrocompany.com/product-6737-NP99BNS7UBL.html

Individual packaging: **1, package with bar code allowing for retail sale**

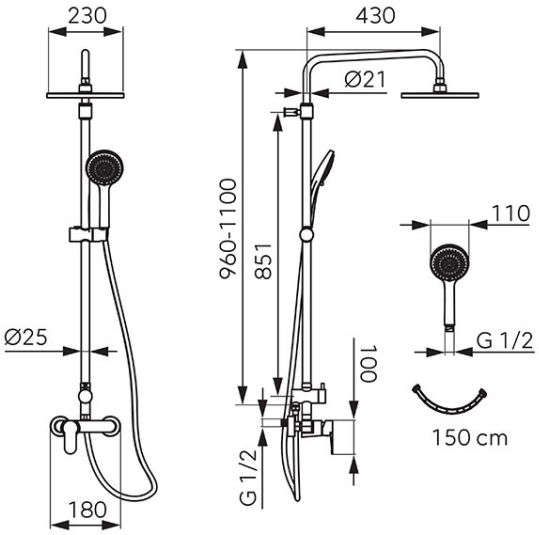

- Switch type: brass switch with ceramic head, integrated with the bottom fixture
- Shower arm length [mm]: 430
- Shower hose length [mm]: 1500
- Additional accessories: complete
- Controlling element (of a mixer): ceramic regulator
- Easy Clean System: yes
- Number of hand shower sprays: 3
- Anti-twist: yes
- Rainfall material: ABS plastic
- Spray handle material: ABS
- Material of spray hose: PVC
- Adjustable height of the shower bar: yes
- Adjustable height of the wall mounting: no
- Adjustable distance between rainfall and wall: yes
- Adjustable shower position: yes
- Type and diameter of connections: connectors G1/2
- Spacing of bar mountings [mm]: 851
- Water saving system: yes
- Spray type: rain,massage,mixed
- Rainfall head dimensions [mm]: 230
- Rainfall bar height [mm]: 960-1100
- Connection spacing: 150
- Acustic Group: N
- Flow class: B
- Hand shower length [mm]: 250