Code: **BCK7P-SET1-S**

Ciriculus - Concealed shower 2F set, chrome

https://www.ferrocompany.com/product-6720-BCK7PSET1S.html

Individual packaging: **1, package with bar code allowing for retail sale**

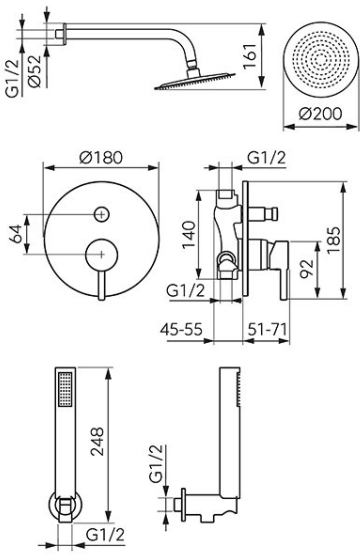

- Switch type: automatic 2-funtional
- Shower arm length [mm]: 346
- Shower hose length [mm]: 1500
- Controlling element (of a mixer): ceramic regulator
- Easy Clean System: yes
- Number of hand shower sprays: 1
- Anti-twist: yes
- Rainfall material: stainless steel
- Body material of a mixer: brass
- Spray handle material: ABS
- Material of spray hose: metal braided
- Adjustable shower position: no
- Type and diameter of connections: connection G1/2
- Spray type: homogeneous
- Rainfall head dimensions [mm]: 200
- Acustic Group: N/N
- Flow class: B/S
- Hand shower length [mm]: 220