Code: **RDW200xxx**

3/4” x 1/2” sanitary manifold

https://www.ferrocompany.com/product-6465-RDW200xxx.html

Individual packaging: **1, package with bar code allowing for retail sale**

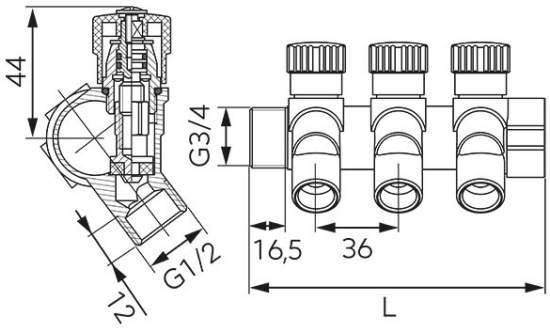

- 3/4” M-F beam, 2-4 ways
- poppet type shut-off valves
- blue and red knobs included
- nominal pressure: 10 bar (PN10)
- maximum temperature: 110°C
- NICKEL FREE - inner surfaces are not nickel-plated
- CW617N-4MS brass - reduced lead and nickel content
- 15 years warranty

Index	3/4” manifold	L [mm]	Individual packaging	Collective packaginig
RDW200200	3/4”x1/2” - 2-ways	93	1	40
RDW200300	3/4”x1/2” - 3-ways	129	1	40
RDW200400	3/4”x1/2” - 4-ways	165	1	32