Code: **S350-B**

Click - shower handle

https://www.ferrocompany.com/product-6360-S350B.html

Individual packaging: **1, package with bar code allowing for retail sale**

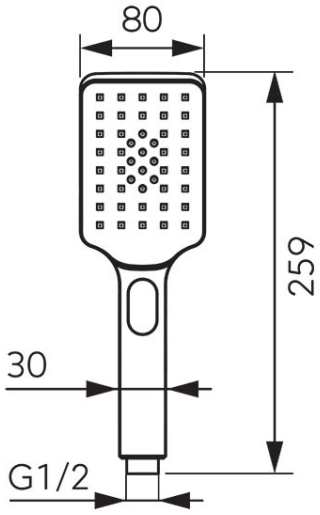

- switching functions by the button
- 3-function
- streams: rain, massage, mixed
- Ferro Easy Clean System - easy limescale removal
- finish: chrome