Code: **BAG2-LA**

Algeo - standing washbasin mixer

https://www.ferrocompany.com/product-6241-BAG2LA.html

Individual packaging: **1, package with bar code allowing for retail sale**

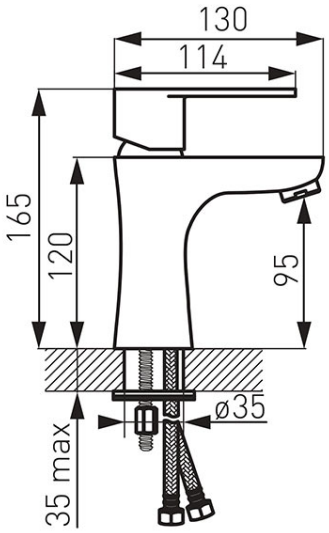

- ceramic cartridge
- single hole assembly
- G5/4 automatic drain plug
- M24x1 flow regulator
- G3/8 - M10x1 flexible connections
- finish: chrome
- product on request
- delivery time: c.a. 21 days

Maximal flow rate for dynamic pressure:

- **Stream: spray**
  - 1,50 bar (21 psi) → 1,1 l/min (0,28 gpm US)
  - 3,00 bar (43 psi) → 1,2 l/min (0,30 gpm US)
  - 4,14 bar (60 psi) → 1,3 l/min (0,33 gpm US)