Code: **NP75SQ-TRV7U**

Trevi Square - rainfall with regular shower and thermostatic mixer

https://www.ferrocompany.com/product-5910-NP75SQTRV7U.html

Individual packaging: **1, package with bar code allowing for retail sale**

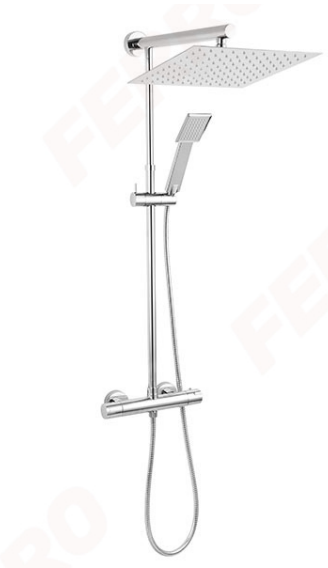

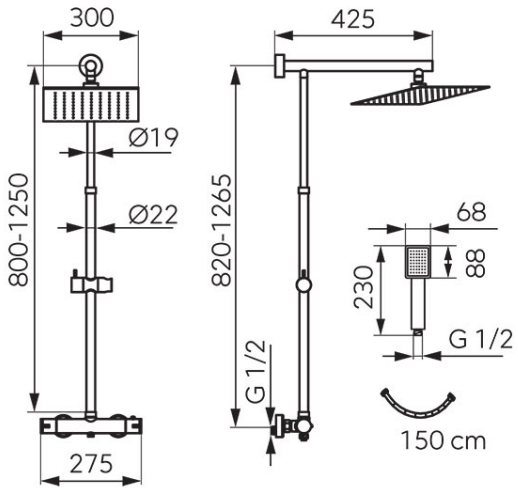

- RAINFALL
  - regulated length of metal bar: 800 – 1250 mm
  - regulated mounting height
  - 300 x 300 mm rectangular of rainfall steel head SLIM
  - integrated wall mounting with rainfall bar
  - Easy Clean System - simple descaling of shower heads
  - chrome
- THERMOSTATIC MIXER
  - thermostatic cartridge
  - integrated ceramic switch rainfall / shower handle
  - Safe Stop 38°C - hot water restriction
  - wall mounting
  - G1/2 eccentric connection 150 +/- 20 mm spacing
  - G3/4 rainfall connection - upper fi tting
  - G1/2 shower connection – bottom fi tting
  - chrome
- SHOWER
  - shower handle diameter - 100 mm
  - 1-function shower handle
  - shower handle chrome
  - Easy Clean System – simple descaling of shower handle
  - 150 cm shower hose in metal braid
  - chrome