Code: **BSL55A**

Stillo - wall-mounted washbasin mixer with ceramic shower switch

https://www.ferrocompany.com/product-5859-BSL55A.html

Individual packaging: **1, package with bar code allowing for retail sale**

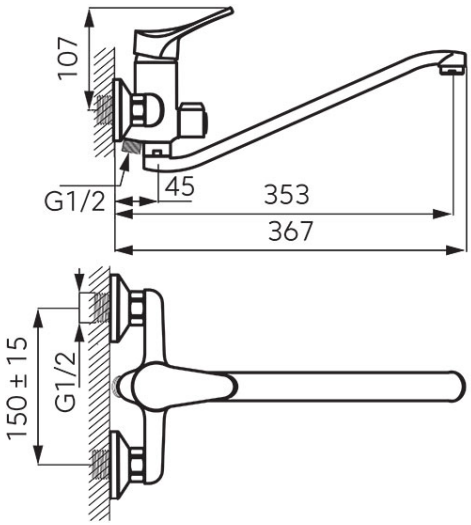

- ceramic cartridge
- wall mounting
- basin/shower ceramic switch
- M24x1 aerator
- G1/2 eccentric connection
- spacing 150 ± 20 mm
- rotational spout
- 353 mm spout
- with spot shower
- chrome