Code: **BZI77**

Zicco - Wall-mounted shower mixer, chrome

https://www.ferrocompany.com/product-5759-BZI77.html

Individual packaging: **1, package with bar code allowing for retail sale**

Collective packaginig: **12**

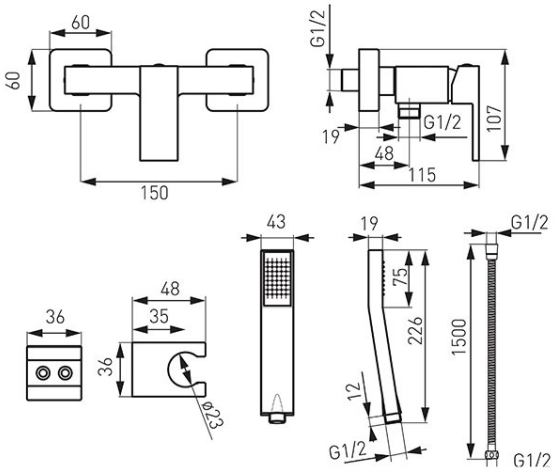

- with spot shower set
- ceramic cartridge
- wall-mounting
- G1/2 eccentric connection spacing 150 ± 20 mm
- G1/2 shower connection
- chrome