Code: **BTG6VL**

Tiga VerdeLine - Bidet standing mixer

https://www.ferrocompany.com/product-5535-BTG6VL.html

Individual packaging: **1, package with bar code allowing for retail sale**

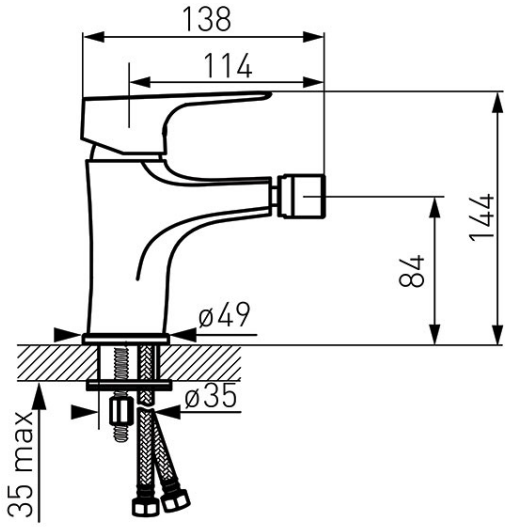

- ceramic regulator
- single-hole assembly
- automatic drain plug G5/4
- FerroAirMix M24x1 aerator with ball joint
- Easy Clean System – lime scale simple to remove
- flexible connectors G3/8 - M10x1
- chrome