Code: **BFO4**

Ferro One - standing sink mixer

https://www.ferrocompany.com/product-5482-BFO4.html

Individual packaging: **1, package with bar code allowing for retail sale**

Collective packaginig: **12**

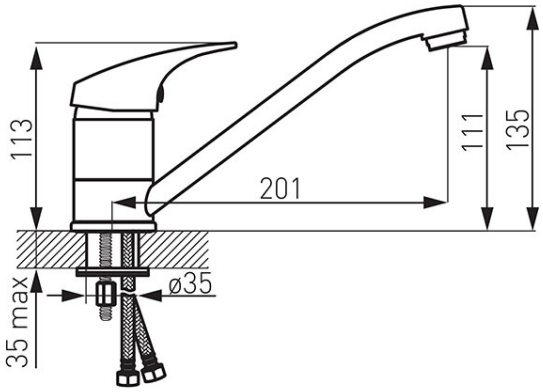

- ceramic regulator
- single-hole assembly
- M24x1 aerator
- swivel spout
- flexible connector G3/8 – M10x1
- chrome