Code: **BAQ7P-SET1-S**

Algeo Square - built-in shower sets, chrome

https://www.ferrocompany.com/product-5450-BAQ7PSET1S.html

Individual packaging: **1, package with bar code allowing for retail sale**

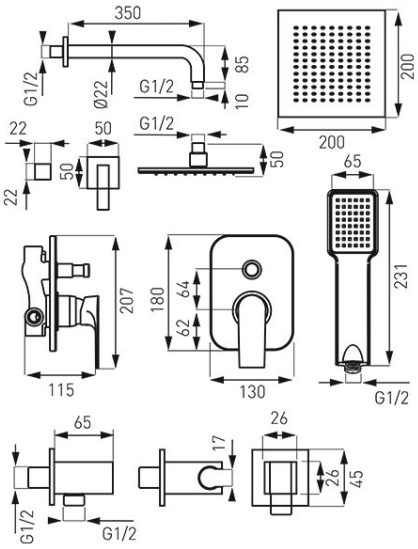

- Rainfall shower with an arm:
- metal rainfall shower plate SLIM
- square shaped shower plate 200 x 200 mm
- 350 mm shower arm
- Ferro Easy Clean System - easy limescale removal
- ball joint - adjustable shower head angle
- metal rosette
- Angled connector:
- with integrated shower handle mount
- G1/2 connection to shower hose
- metal rosette
- Shower hose:
- in metal braid
- length 150 cm
- cone nut
- Shower handle:
- square 75 x 75 mm
- 1-function shower handle
- stream: rain
- Ferro Easy Clean System - easy limescale removal
- Built-in mixer:
- 2-function flush-mounted
- ceramic cartridge
- switch with Anti-Stop function
- connection, shower fitting: G1/2
- metal cover
- chrome