# Code: **KPEX**

## Ball valve for 16 x 2mm multilayer pipes

https://www.ferrocompany.com/product-5319-KPEX.html

Individual packaging: **10, package with bar code allowing for retail sale**

Collective packaginig: **200**

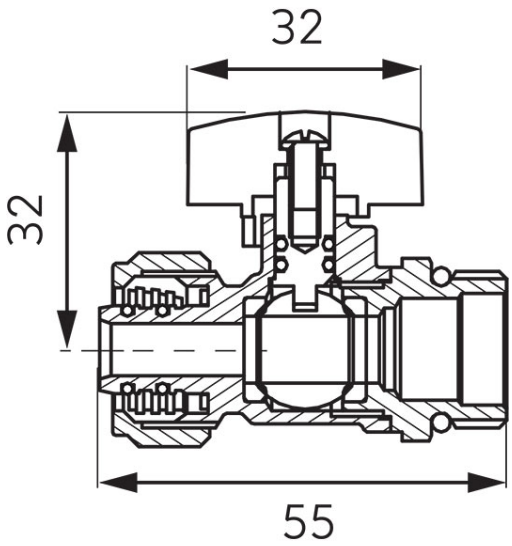


- utility media: water
- male
- 1/2” connection with EPDM O-ring seal
- compression fitting for 16x2 mm multilayer pipes with double EPDM O-ring seal
- body and ball material: brass
- ball seal: PTFE
- stem seal: EPDM
- handle: metal butterfly
- nominal pressure: 1.0 MPa (10 bar)
- maximum working temperature: 100°C

| Code | Butterfly handle | Individ. pack. | Collect. pack. | R* |
|---|---|---|---|---|
| KPEX16 | red | 10 | 200 | KPEX16W |
| KPEX16-BH | blue | 10 | 200 | KPEX16-BHW |

***R - package with bar code allowing for retail sale**