FERRO®

Code: **DRGM1/48/58SA**

Mezzo II - Single kitchen sink 58x48 cm, sandy

https://www.ferrocompany.com/product-4469-DRGM14858SA.html

Individual packaging: **1, package with bar code allowing for retail sale**

Collective packaginig: **-**

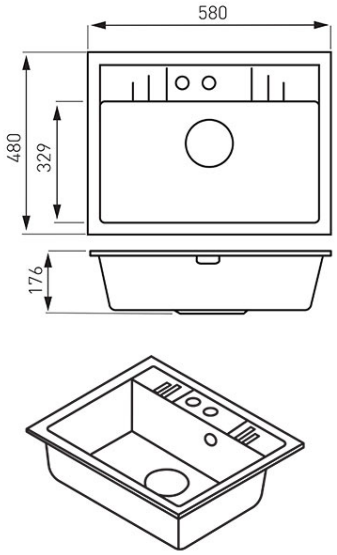

- 15-year guarantee on the sink
- 2-year guarantee on siphon and waste strainer
- automatic basket waste strainer included in the set
- siphon included in the set for connecting a dishwasher or washing machine
- recessed
- with overflow