Code: **BVAM2**

Vasto Medico - Washbasin standing mixer

https://www.ferrocompany.com/product-4435-BVAM2.html

Individual packaging: **1, package with bar code allowing for retail sale**

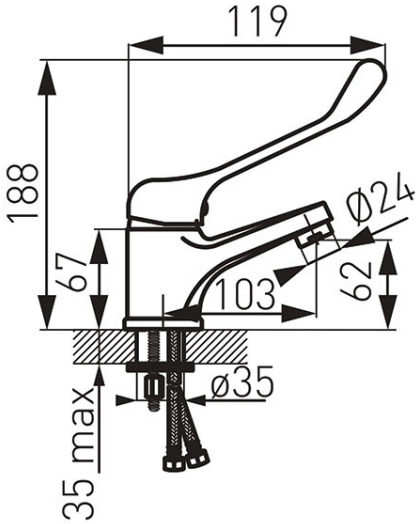

- special handle
- ceramic cartridge
- single hole mounted
- automatic drain plug G1¼
- flow regulator M24x1
- flexible connectors G 3/8 - M10x1
- chrome finishing