Code: **6138.0**

Metalia 1 - toilet paper holder

https://www.ferrocompany.com/product-3925-61380.html

Individual packaging: **1, package with bar code allowing for retail sale**

Collective packaginig: **22**

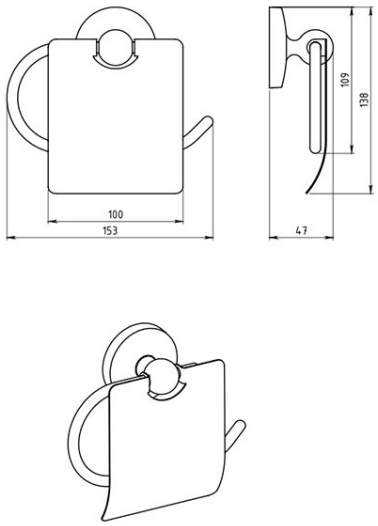

Available to the end of existing stock.