Code: **0203W**

25-40-130 drinking water circulation pump

https://www.ferrocompany.com/product-3724-0203W.html

Individual packaging: **1, package with bar code allowing for retail sale**

Collective packaginig: **8**

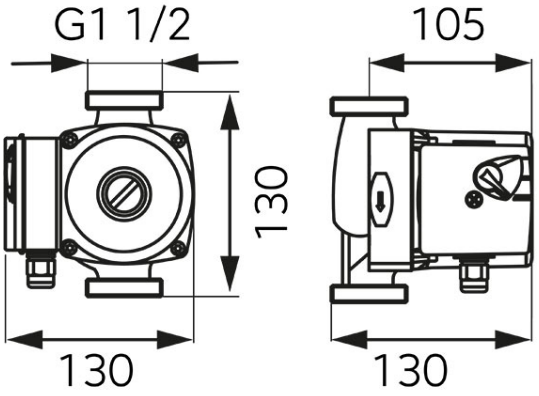

- Operating range: 0.2 - 3.5 m³/h
- Lifting height: max. 3.8 m
- Liquid temperature: min. +2°C, max. +110°C
- Application: intended for drinking water only
- Maximum pressure: 10 bar
- Protection class: IP 44
- Insulation class: H
- Cable gland: PG 11
- Installation: axel shaft in horizontal position and terminal box located as desired except under the pump
- Voltage: 50-60 Hz, ~230 V
- Power consumption (I, II, III): 35/45/65 W
- Connection spacing: 130 mm
- Connection: G1 1/2
- Ambient temperature: min. +2°C, max. +40°C