Code: **4341G**

Straight pipe union male

https://www.ferrocompany.com/product-3697-4341G.html

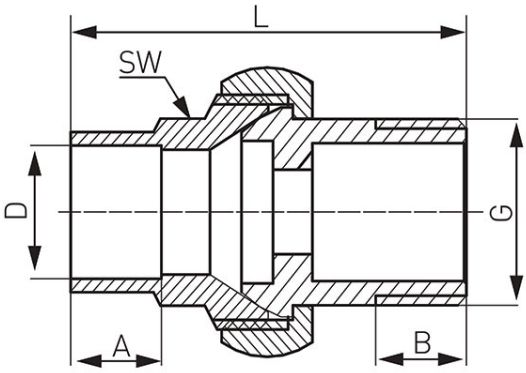

Index	G	A (mm)	B (mm)	D (mm)	L (mm)	SW (mm)	Individ. pack.	Bulk pack.
4341G-1501	G1/2	11,5	11,5	15	50	19	10	250
4341G-1801	G1/2	12,6	11,5	18	52	23	10	200
4341G-1802	G3/4	12,6	13,5	18	57,5	23	10	180
4341G-2803	G1	18,4	16	28	69	33	5	100