Code: **S286**

G 1 1/4”x32 mm oval trap

https://www.ferrocompany.com/product-3685-S286.html

Individual packaging: **1, package with bar code allowing for retail sale**

Collective packaginig: **-**

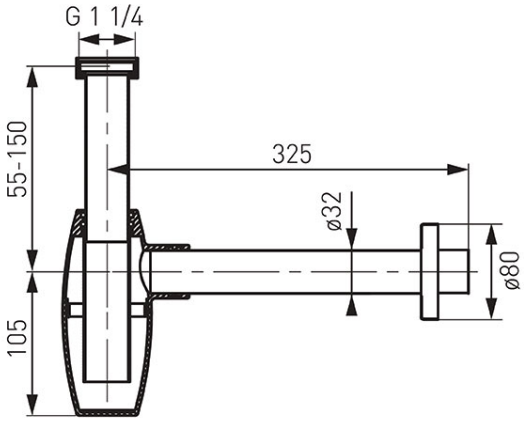

- controlled outflow pipe up to 320 mm
- rosette