# Code: **BST4**

## Standard Standing sink mixer

https://www.ferrocompany.com/product-2937-BST4.html

Individual packaging: **1, package with bar code allowing for retail sale**

Collective packaginig: **12**

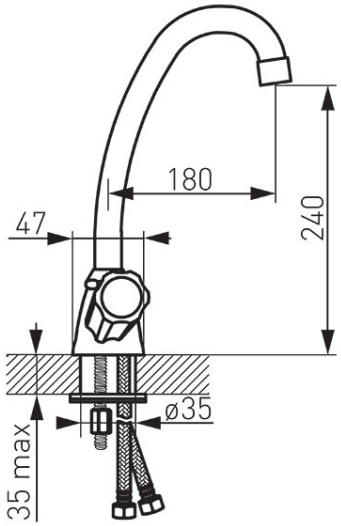


- moving faucet heads
- single-hole assembly
- M24x1 flow regulator
- rotational spout
- G 3/8 - M10x1 flexible connectors
- chrome